FIDES-AC DIMMER FOR LED SMPS

STANDBY ZERO WITH ADVANCED LED DIMMER

PRELIMINARY BRIEF DATA

The FIDES-AC DIMMER are free voltage AC to DC LED SMPS for advanced interactive day light dimming with IEC62301 absolute standby zero system for wireless building managements supports.

The standby zero and advanced interactive dimming are patented and patent pending technology employed for supports all the attractive features of ECO LED lighting products such as reduced ~50% power consumption then ordinary LED lighting.

Low cost, design flexibility, and easy design-in, these parts are targeted to more sophisticated applications and offer several enhanced technology and features, including continuous AC and DC both of input voltage coverage from 80-380V wide ranges and output load up to 1K Watts for flicker less additional PWM dimming driver.

The advanced dimming are surrounding luminosity trace to adapted interactive dimming to actively fitting the ambient.

Also included built-in features likes temp / humidity with light sensor compliant with IEC 61131-9 are direct reading room environments are free to makes smart grid network.

The employed standby zero technology is cost reduced switch wire cable with standby power saving.

Adapted interactive dimming technology is actively compensation to surround embient light dimming provide ECO lighting environments.

The incorporates a high performance **Ir DJT chain networks** function are realized modern smart grid building managements for LED lighting.

These features simplify the task of the Total Energy Consumption limit to daylight harvesting LED luminare intelligent smart grid building management supports.

FEATURES

- Free input AC80~380V Range
- IEC62301 Stand by zero support (under 30mW at standby mode)
- Advance interactive daylight dimming
- Full Infrared communication network Dimming support:
- Includes room humidity / temp and luminance sensor Directe reading supports.
- Temperature / Humidity / AC power measurement with On/Offf and 5bit Dimming by Ir remote controller and USB local AP server through the internet
- Hybrid network AP supports USB2.0
- Building light management program for Windows 8.1 supports
- IEC 61000-4-2(ESD) EN-550022
- -40°C- +125°C
- 10 year limited warranty.

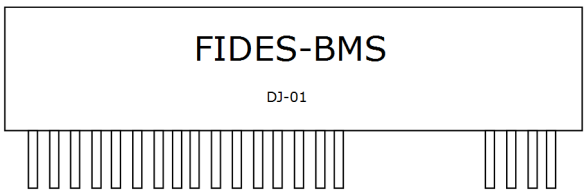

FIDES-ADSZ (140X25X3mm)

Typical Application Block Circuit

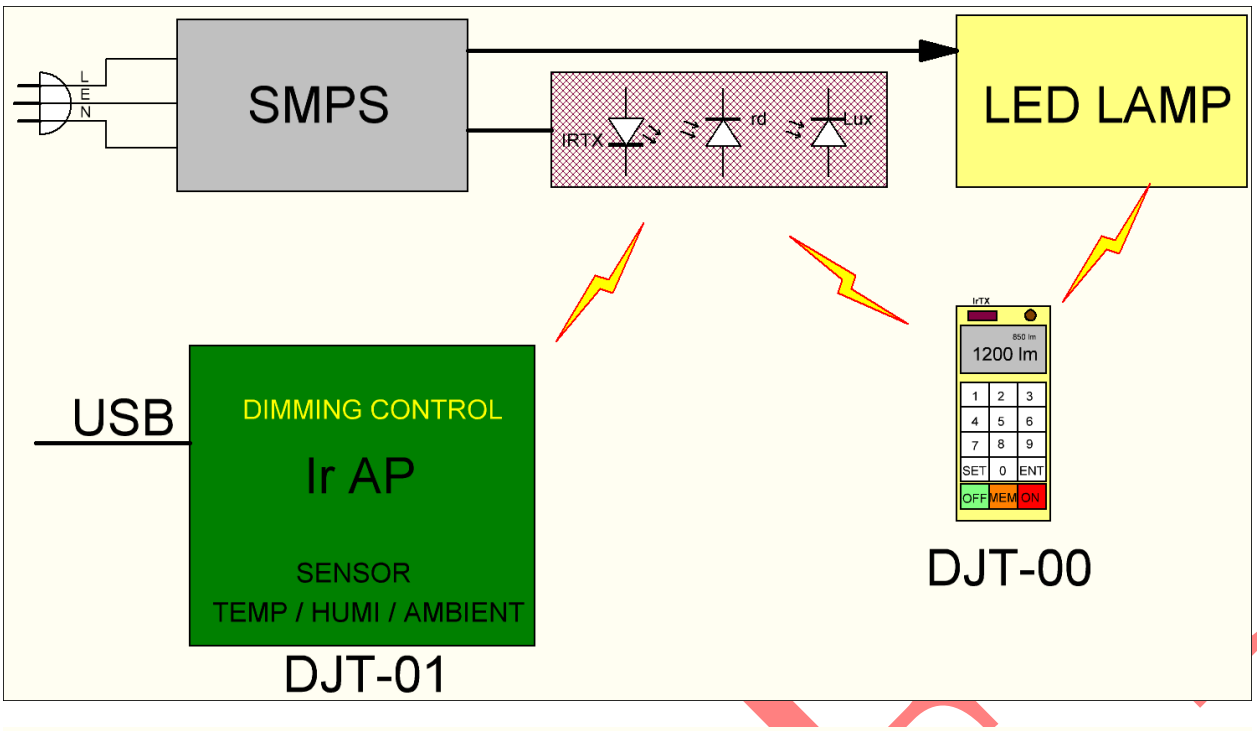

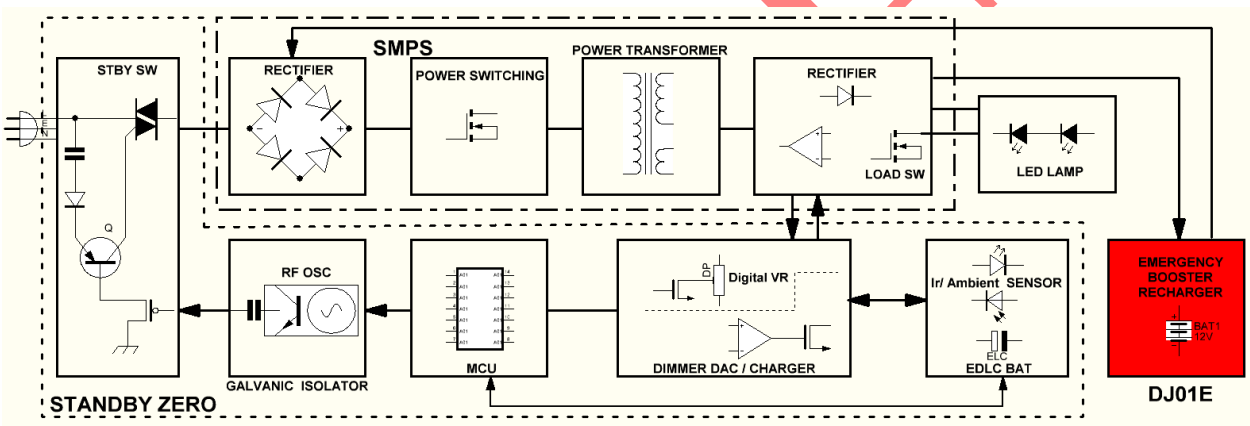

Application circuit to SMPS

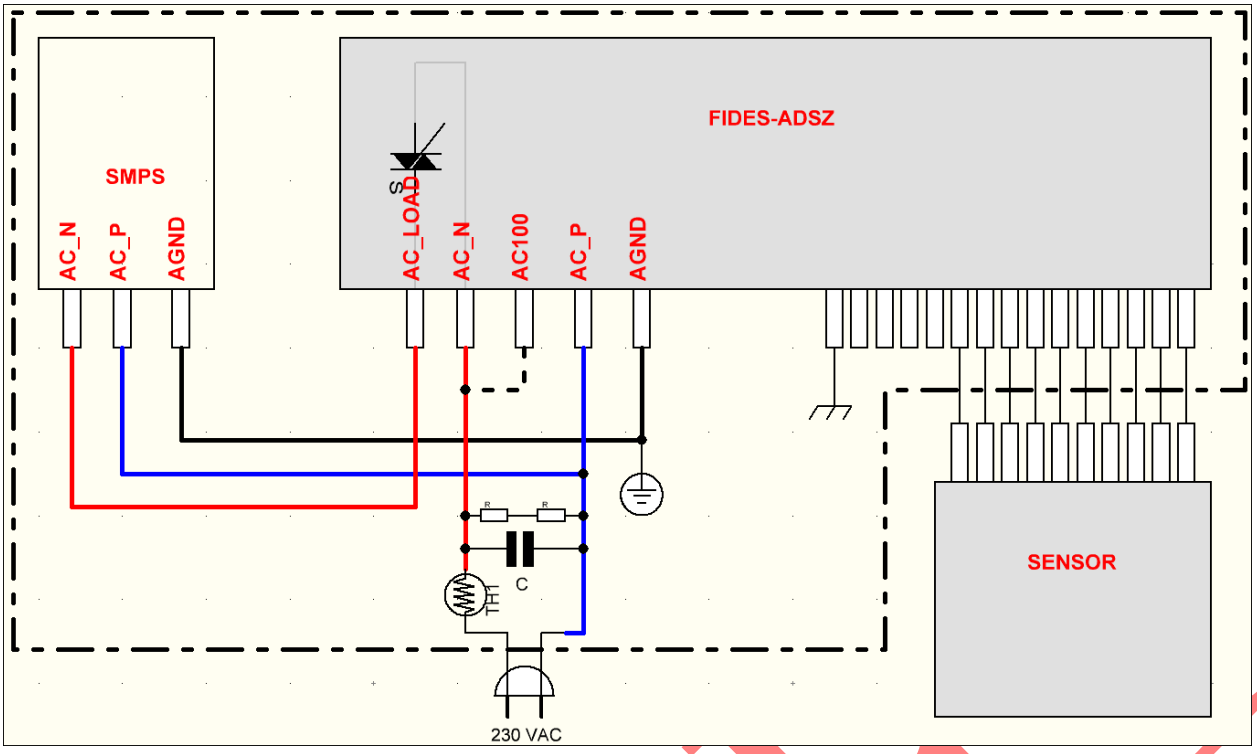

Example of voltage control in SMPS comparator

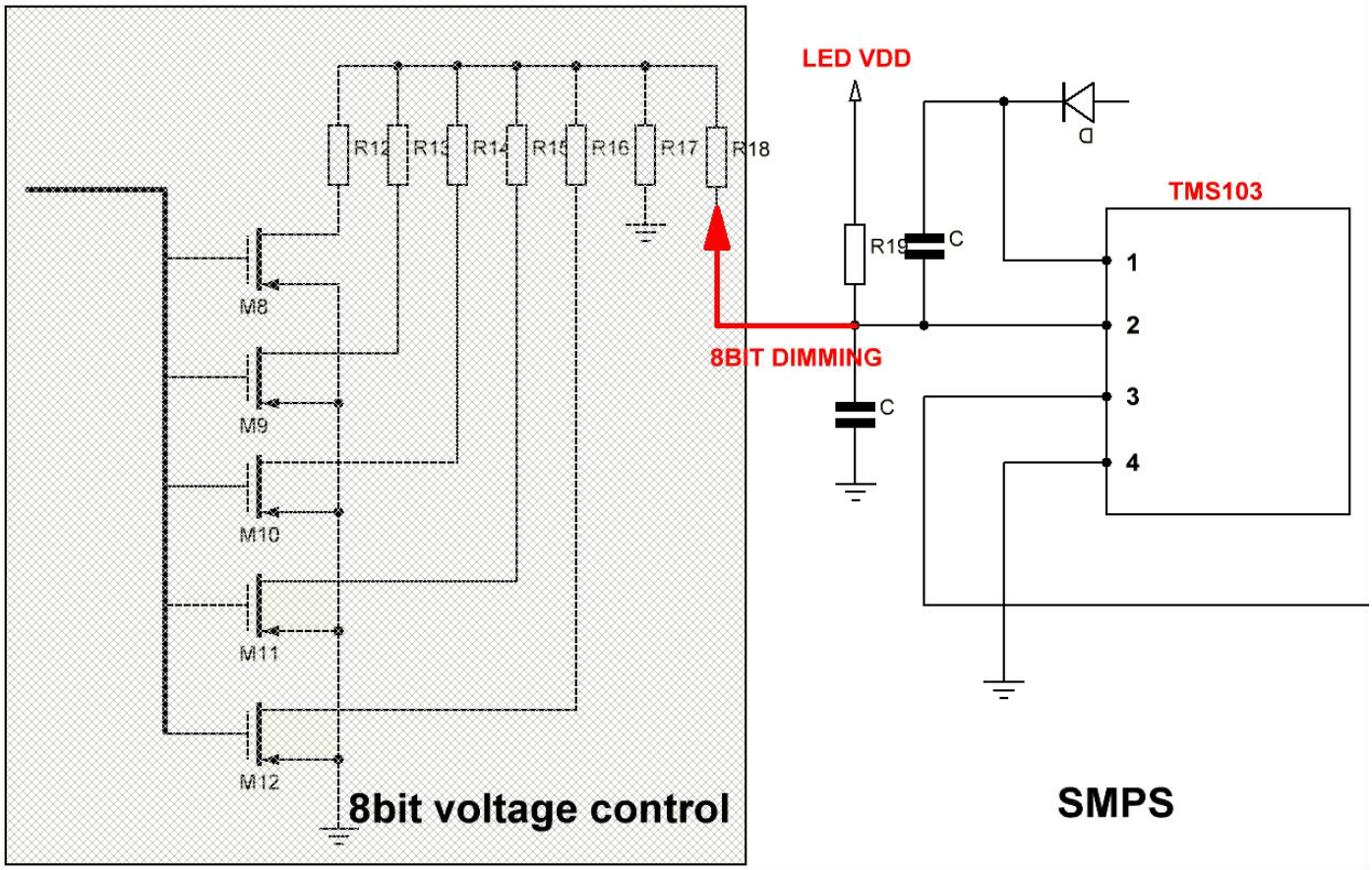

Example of Load_on pin application

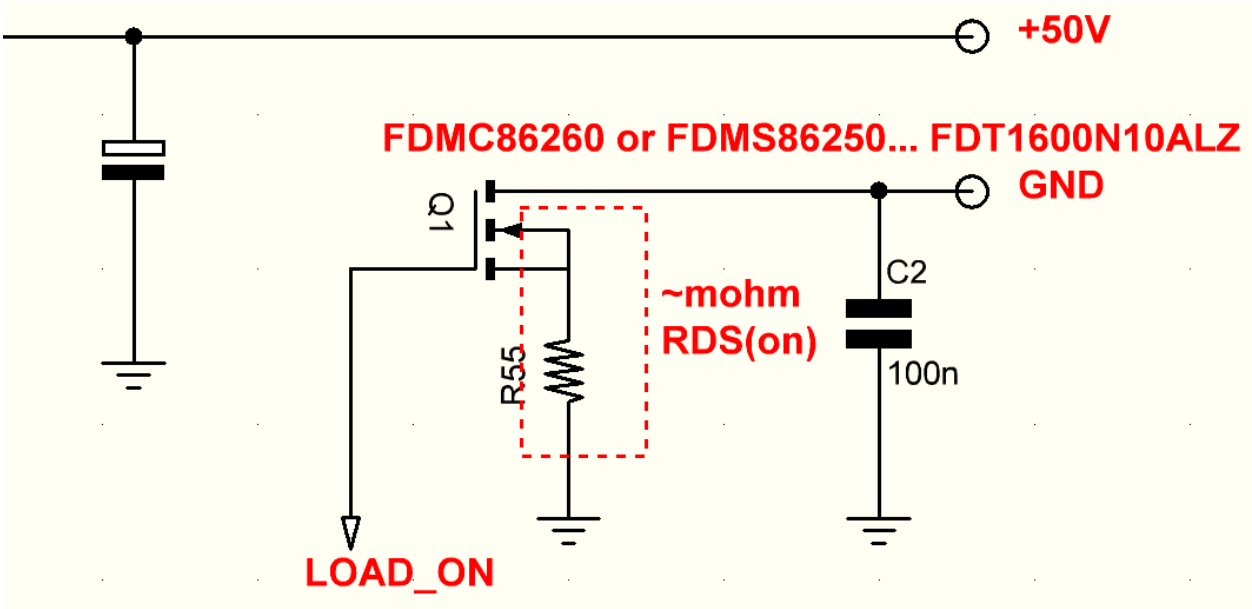

Electrical Characteristics (Test condition: VIN=AC220V/60Hz, Ta=25, unless otherwise specified.)

ESD Ratings: Human Body Model, 3B 8000 V

Machine Model, C 400 V

Recommended Peak Pulse voltage Operating Conditions

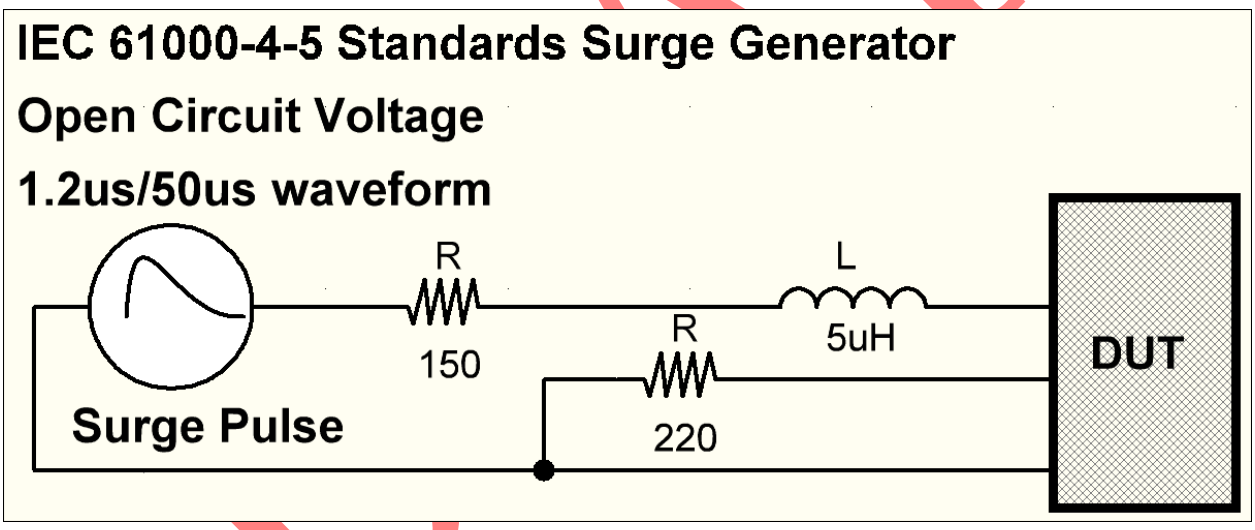

Typical Characteristics – Standby power consumption

Typical Characteristics – CC / CV dimming

Typical Characteristics – AC Load

Typical Characteristics – luminance sensor

Typical Characteristics – Temp / humidity

Typical Characteristics – Ir communication

Very wide range and High resolution. (0.008 - 65535 lx)

Package information(size, pin map)

The FIDES-ADSZ is supplied in a RoHS compliant leadless mold package. The package is lead (Pb) free, and used a 'green' compound. The package is fully compliant with European Union directive 2002/95/EC.
This package is 160mm x 30mm. The solder pads are on a 2.54mm pitch. The above mechanical drawing shows the **DJT-20** package. All dimensions are in millimeters.
The date code format is XXYY where XX = two-digit week number, YY = two-digit year number.

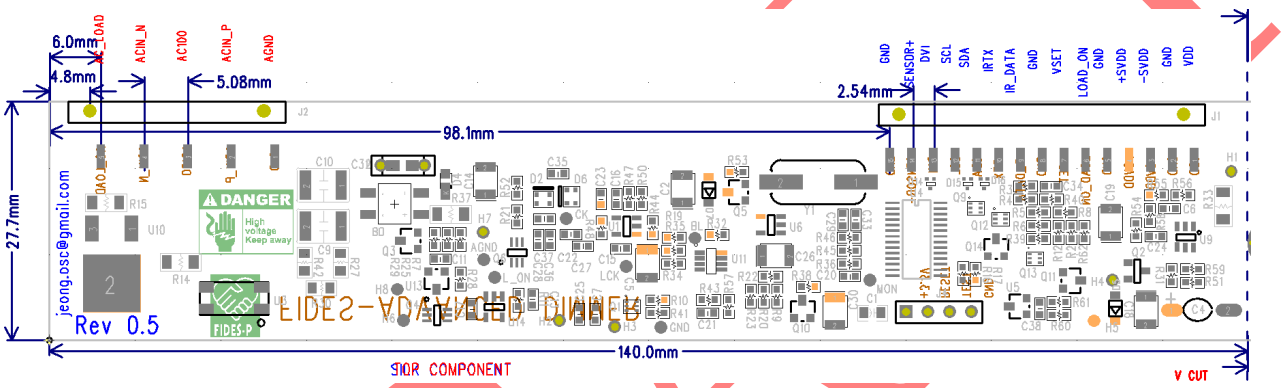

GND		**These pin must be 10pin connected with Sensor PCB**
SENSOR+		
DVI		
SCL		
SDA		
IRTX		
IR_DATA		
GND		
+SVDD		
-SVDD		

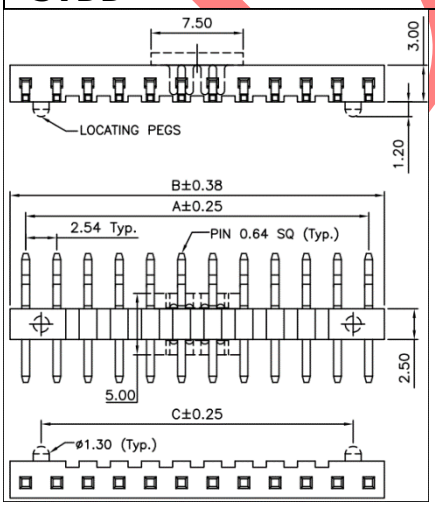

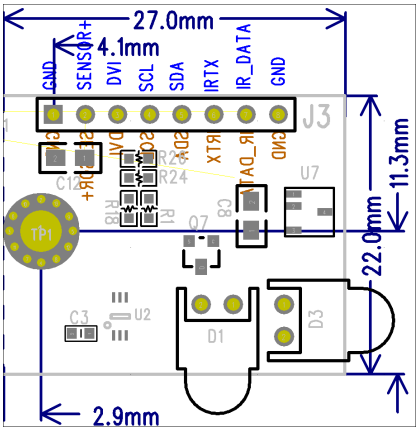

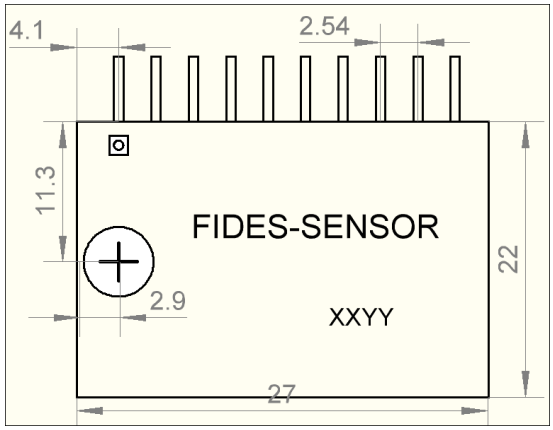

units: mm[inch]

tolerance: ±0.50[±0.020]

pin section tolerance: ±0.10[±0.004]

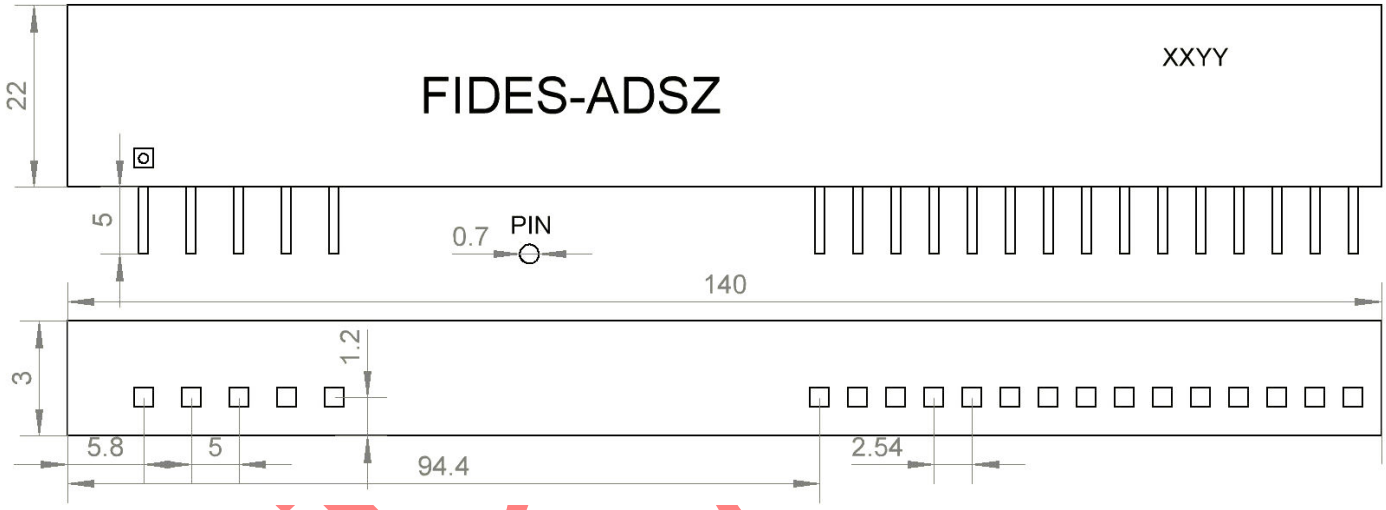

The FIDES-ADSZ is supplied in Pb free DJT-20 package.
The recommended solder reflow profile for package options is show below.

Recommended Soldering Thermal Data

parameter	conditions/description	min	typ	max	units
hand soldering	1.5 mm from case for 10 seconds			300	°C
wave soldering	see wave soldering profile			260	°C

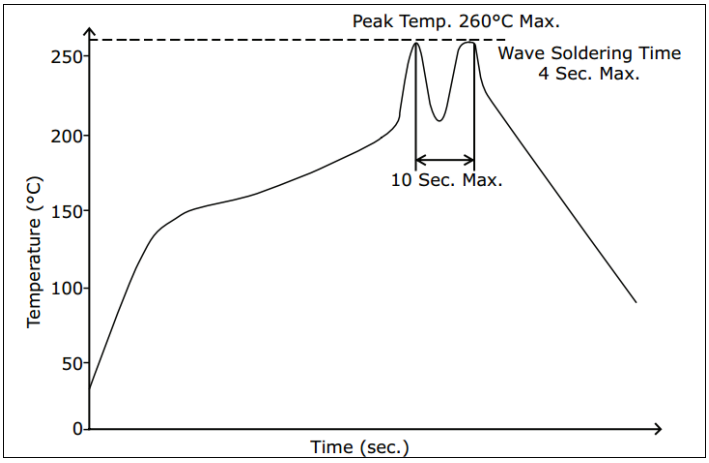

Terminal descriptions

IO: I=input, O=output, B=Bidirectional, - = no connection

Pin #	Pin Name	Description	Circuit (shows Input or output port)	Voltage
	General	**Every pins except ground and power supply pins have ESD (Electrical static damage) protection diodes between pin and ground and VDD potential.**	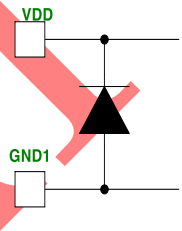	
1	AC Load	Output to SMPS AC_N input pin	(AC INPUT) 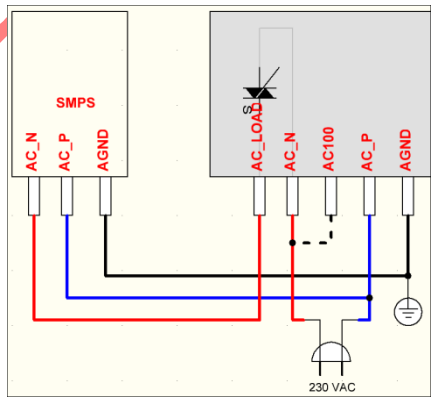	AC **0 – 380V**
2	AC_N Input	AC Power line input range 80~380V		
3	AC_100	When under AC 160V input, needs to connect with AC_N pin.		
4	AC_P	AC input from 80~380V		
5	Earth ground	AC input earth pin.		
6	GND	Digital GND of DC sides.		
7	SENSOR+	Internally controlled +DC power output (Uses to sensor VDD)	(+SVDD-0.65V)	3.4V 50mA max(Hi-Z)
8	DVI	Un synchronized reset	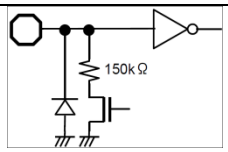	7V

9	SCL	**Serial data clock output**	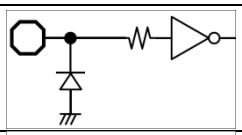	1.65V - Vcc
10	SDA	Serial Data IO from external control	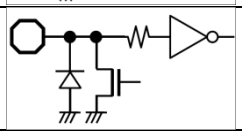	
11	IRTX	Ir data transmission.	(Logic Ouput)	3V
12	IRDATA	Ir data input	(Logic Input)	
13	GND	DC sides GND		0
14	VSET	SMPS voltage reference voltage divide output 8Bit resistor value control. Internal resistor are 1K to 100K by order	(Analog Input ; internal resistor values needs to request) 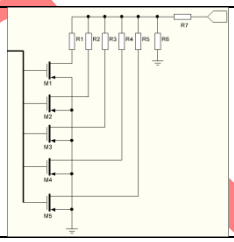	Hi-Z DC ~50V Less 10mA
15	LOAD_ON	SMPS low side load On/Off switch, internal pull up resistor value are 5.1K. When recharging mode at standby status, This pin are low. *see the application notes	(Analog Switch) 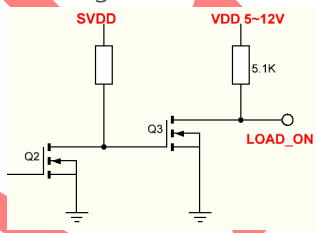	DC 5~15V Less 10mA
16	GND	DC sides GND		
17	+SVDD	Regulated 4.2V output. Connect to Li-ion BAT PLUS. I-output <50mA	(Analog Output)	+4.2V
18	-SVDD	Regulated 4.2V output. Connect to Li-ion BAT MINUS. I-output <50mA		4.2V 50mA
19	GND	DC sides GND		
20	VDD	VDD INPUT		12-18V 500mA

Sensor PCB

Pin #	Pin Name	Description	Circuit (shows Input or output port)	Voltage
1S	GND	DC sides GND		
2S	SENSOR+	Controlled +DC power input (sensor VDD)		
3S	DVI	Un synchronized reset		
4S	SCL	**Serial data clock input**		
5S	SDA	Serial Data IO from external control		
6S	IRTX	Ir transmit data input		
7S	IRDATA	Ir data output		
8S	GND	DC sides GND		
9S	+SVDD	Regulated 4.2V output. Connect to Li-ion BAT PLUS. I-output <50mA		
10S	-SVDD	Regulated 3.6V output. Connect to Li-ion BAT MINUS. I-output <50mA		

Unless otherwise specified, VDD=5V and Ta=25℃

Absolute Maximum Ratings

Item	Symbol	Parameter	min	typ	max	unit	Condition
Rated Voltage Range	VDD		4.5	5.0	5.5	V	Max V =6.0V
Junction Temperature	Tj		-40	25	125	℃	
Logic Low input V	ViL	AD0, AD1,ISS, SBP, RW, CK, DA, REGSEL, OINV	0		0.2VREF	V	
Logic High input V	ViH		0.8VREF		VREF	V	
Logic Low output V	VoL	DA Terminal	0		0.2VREF	V	
Logic High output V	VoH		0.8VREF		VREF	V	
Low Level output I	IoL				-1	mA	
High Level output I	IoH		1			mA	
Switch Clock Freq	FCLK			200		KHz	
Dimmer range	DIM		1		255		
Drive current	I_DRV	LD0-2、 SW0,1,2,3 Terminal	40			mA	
Regulator output	VREF	VREFO Terminal	2.95	3.0	3.05	V	

Max AC detection voltage	V_AC	VDT Terminal	0		VDD	V	
LEDstage divide V	V_LEDD	VS0, VS1	0.1		VDD	V	
Luminance sense	VL	PS Terminal	0.15		1.5	V	
LED 電流検出 Threshold	VTHIS	IS0 Terminal				V	Comparate with saw
Power consuption					4.5	mA	
ESD		ESD Capability, Human Body Model ESD Capacity, Charged Device Model			5	V	

Notes:

1. Stresses beyond those listed under Absolute Maximum Ratings may cause permanent damage to the device.
2. All voltage values, accept differential voltages, are given with respect to GND pin.

SPI interface timing

Host MPU to P1 data write.

P1 send the data to host MPU.

Write timing

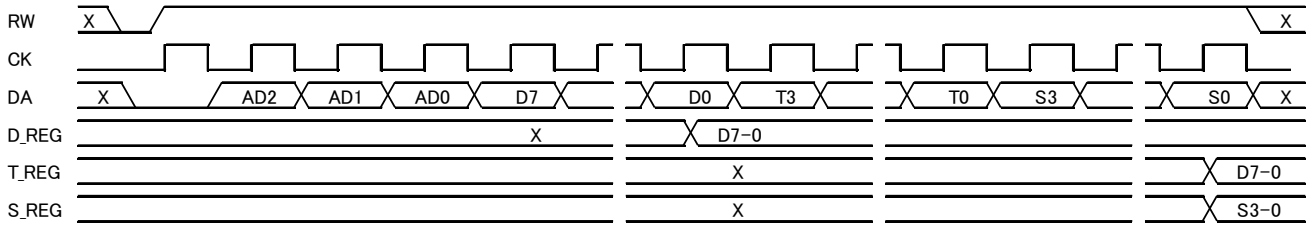

D7-0 : Dimming data (Write)

AD2_0 : Chip address data (0-7)

D_REG : dimming data (resistor output)

T_REG : test data (register output); Select the test monitor output

S_REG : test data (register output);

S<1>=0→ PS data enable S<1>=1→ Dimmer data change by register

S<3>=0→ Test output S<3>=1→ Test 2 output

P1 will be edge detection from CK and ignored first data.

Read timing

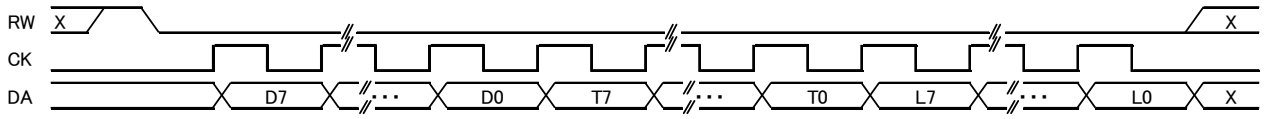

D7-0 : Dimming data (Read)

T7-0 : Temperature data

L7-0 : Photo diode ambient data

P1 can read edge rise of CK and MPU can edge down of CK read.

Read timing (address reserved)

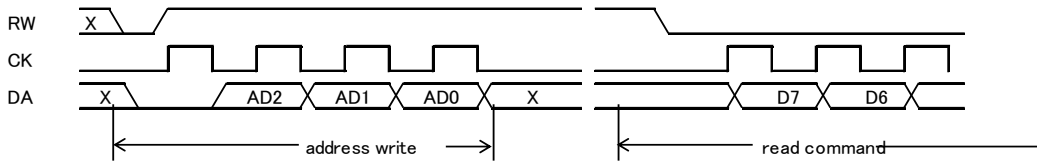

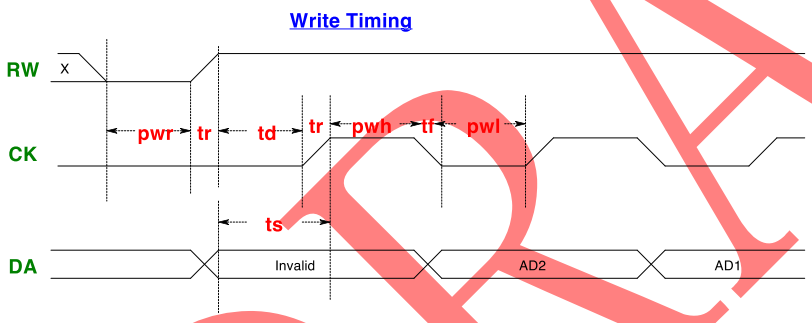

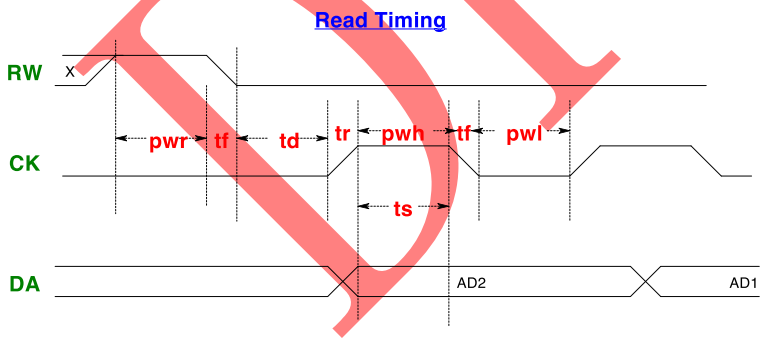

Timing:

pwr: RW pulse width	; >10uS
tf: Fall time	; <100nS
td : Delay time	; >5uS
tr: Rise time	; <100nS
pwh; Clock High level	; >5uS
pwl; Clock low level	; > 5uS

SPI resister Data

* Write Data

（1）AD2-0：address data(0-3)

The chip address are 2bit selectable by AD0,1. (internally AD2 are "0" reserved)

AD1 (pin #14)and AD0 pin are chip addressed to control by SPI when it's matched chip address.

Table. Chip address

#	Chip Select Address of Register			Selected chip
	AD0	AD1	AD2	
0	0	0	0	chip 0
1	1	0	0	chip 1
2	0	1	0	chip 2
3	1	1	0	chip 3

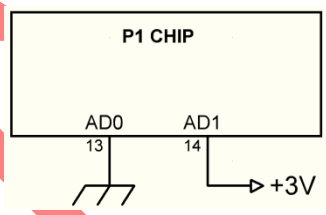

Fig. FIDES-P1 Chip address set

Example of Fig FIDES-P1 Chip address set are illustrated "2". The access AD[2:0] are "010"to serial data send.

(2) D_REG : dimming data (Dimming)resister output

Dimming control data for external commands.

D[7:0]=FFh are maximum bright. D[7:0]=01 are minimum brightness (Max Dimming)

Also, this resister to make enable needs to set **S<1>=1**

(3) S_REG : Test data resistor output :

S<0> ; reserved

S<1>=0 →Photo Sensor(PS) are enable. S<1>=1→resister can **Dimmer data change**

S<2> ; reserved

S<3>=0 →Test monitor1 (TO)output S<3>=1 →Test monitor2 (TO)output

(4) T_REG : Test data (resister output) : Test monitor output choose the selector

This resister can be select for monitoring signals. S-register S<3> are selected signal to Monitor pin "TO" can monitoring.

Fig for chip monitoring mode table.

#	T<3:0>	TOoutput S<3>=0	TO 出力 S<3>=1
0	0000	Open	Open
1	0001	GNDQ (quiet Ground)	GNDQ (quiet Ground)
2	0010	BGRO(Band Gap Regulator) output 1.16V	RNX(Power On reset output)
3	0011	V3Q (Quiet 3V)	V3N (Noisy 3V)
4	0100	VHA (ADC6 Reference High Voltage)	VLA(ADC6 Reference Low Voltage)
5	0101	ADTA (Temperature voltage for ADC)	TAO (Temperature Sense Voltage)
6	0110	GNDQ (quiet Ground)	GNDQ (quiet Ground)
7	0111	VSWO (Saw Tooth wave of main reg)	ISOOO (LED Current Sense Buffer Voltage)
8	1000	CK39 (Around 39Hz output)	ILMLO (ISOOO & 0.12V Comparator Output)
9	1001	CK78 (Twice Frequency of CK39)	CK10K (10KHz clock output)
10	1010	CKMON (Clock Signal)	DMO (Dimmer Pulse output)
11	1011	ISRPO (Error Amp Comparator Output)	LSRPO (Error Amp ILM Output)
12	1100	ACZ (AC zero Cross Output)	ACPLS -Not used
13	1101	MODU (DUEN (Up/Down) Output)	MOMCK (Sub -reg clock output)
14	1110	SHTDWN (Shut Down at Tj>125C)	Open
15	1111	Open	Open

* Read Register

(1) D7-0 : Dimming data (Read)

L <7:0> - T <7:0> OUTPUT for ambient data PS or D-Register Write data, temperature data to Write are push out to removed temperature data results return to give.

(2) T7-0 : Temperature data (output)

Temperature data output. But LSB 2bit are ignored T<2>=T00 is lowest temperature data.

T(7)	T(6)	T(5)	T(4)	T(3)	T(2)	T(1)	T(0)
T05	T04	T03	T02	T01	T00	X	X

Temperature data MSB Temperature data LSB

(3) L7-0:Photo diode's ambient data

Photo Sensor or ambient resister data are.

But LSB 2bit are ignored L<2>are minimum ambient data.

L(7)	L(6)	L(5)	L(4)	L(3)	L(2)	L(1)	L(0)
L05	L04	L03	L02	L01	L00	X	X

Ambient data MSB Ambient data LSB

Description

The FIDES-P1 is a highly integrated, flexible, multi-string LED driver that uses external MOSFETs to allow high LED string currents, and includes temperature power supply control to maximize LED life efficiency. The driver optionally connects to a LED string faults fix-up functions help to black out of luminaire system.

The easy install to plug in light sensor offer automatic dimming control for intelligent ECO power saving. Synchronization for use in PLC or MCU by LCD TV backlight applications.

The drivers provide multiple methods of controlling LED brightness, through both peak current control and pulse width control of the PLC and light sensor, internal temperature drive signals. Peak temperature control offers excellent MTBF consistency, while pulse width control allows brightness management.

FIDES-P1 provides protection features such as open-LED and over temperature protection.

An on-chip temperature sensor is selectable 2bits control register values. At over temperature, automatically shut-down or decrees power driving. All resistor values are read and wright to changeable through the serial interface if a different power condition is desired.

High-voltage start-up regulator

The FIDES-P1 contains an internal high voltage to low voltage regulator that allows the AC input to be supply to 5VDC of main IC and 15V high side drive supply. This startup circuits is totally current required 500uA (internally 200uA). The first stage desired output voltages can adjust by FB resistors.

This example circuits current consumption

are 20~25mA with zener diode.

Applications Information

Internal temperature sensor temp vs V

Shutdown V = 1.79V

Rev.: FIDES-DOC052014DB1-E-KR_pre